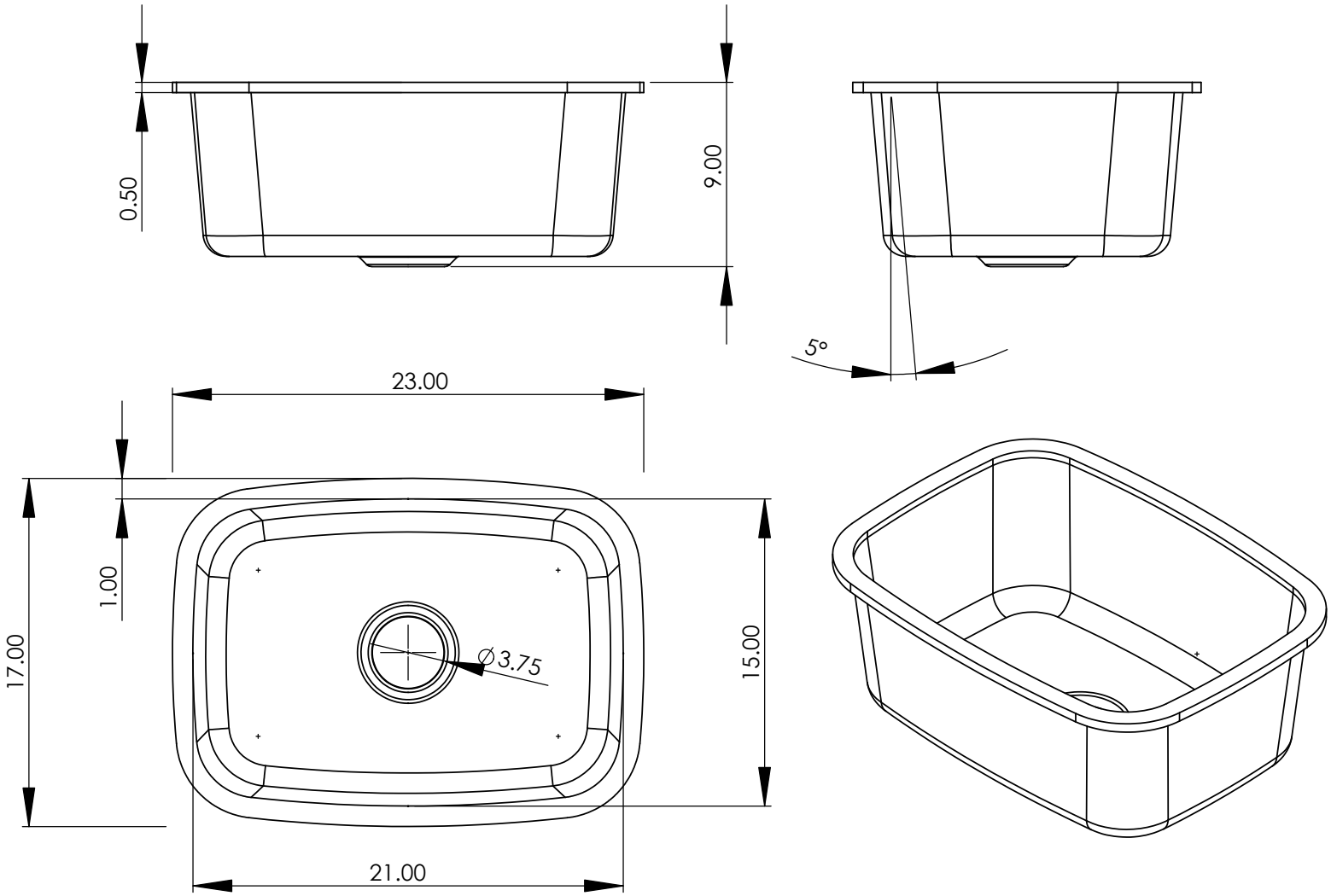

	NAME	DATE
DRAWN	H. GAMSJAGER	7/26/2007
CHECKED		
ENG APPR.		
MFG APPR.		
Q.A.		

COMMENTS:

UNLESS OTHERWISE SPECIFIED:
DIMENSIONS ARE IN INCHES
TOLERANCES: ±

MATERIAL

FINISH

DO NOT SCALE DRAWING

PROPRIETARY AND CONFIDENTIAL

THE INFORMATION CONTAINED IN THIS DRAWING IS THE SOLE PROPERTY OF CLARKE PRODUCTS INC. ANY REPRODUCTION IN PART OR AS A WHOLE WITHOUT THE WRITTEN PERMISSION OF CLARKE PRODUCTS INC. IS PROHIBITED.

CLARKE PRODUCTS INC.

TITLE:

SIZE	DWG. NO.	REV
A	Caravan	

SCALE: 1:8 | WEIGHT: | SHEET 1 OF 1

5 4 3 2 1